Hubless Rim Concept in Driven Wheels

Manoneet Kumar
Project Associate
Department of Mechanical Engineering
Shri Vishnu Engineering College for Women(Autonomous)Bhimavaram, Andhra Pradesh-(534202)

Abstract

Hubless Rim is a very new and innovative concept in the field of Automobiles. Now-a-days every of vehicles is having either stainless steel spokes wheel or Alloy wheel. This report consists a very new type wheel which do not have any spokes or support from hub to rim. In every of the vehicles the hub is fitted with Stub axle/Shaft which restricts the axial motion of the wheels and further on this hub is connected with a Rim of required Tyre diameter. This combination of Hub and Rim together known as wheel. This Hubless rim concept eliminates the hub and the connecting spokes from the wheel thus making a wheel lighter in weight. This concept is limited to Driven wheels only (i.e. In front wheels for Rear-Wheel Drives and In Rear wheels for Front-Wheel Drives).

Keywords: FWD, ID, LMV, OD, RWD

I. INTRODUCTION

Hubless Rim is the modified form of wheels for Light Motive Vehicles in which there is elimination of Hub from the traditional wheels. The eliminated hub gives it an excellent appearance with a lot many advantages over Hub-wheels. It reduces the overall weight of the wheels in the vehicle along with an advanced innovative design. It proves itself to be one of the great innovations in the field of automobiles. Further-on it also reduces the material consumption thus resulting in overall cost reduction.

Fig. 1: Concept Assembled View

II. MANUFACTURING PROCEDURE

The Hubless Rim is basically to be used in LMV (Light Motive Vehicles), as it is just being designed for Cars and Bikes.
The exploded view of the Hubless rim is as shown below.

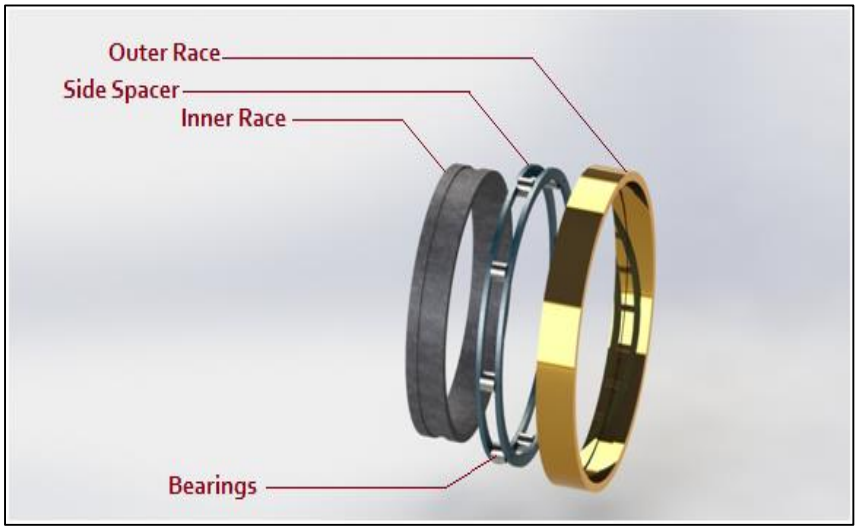

Fig. 2: Exploded View of Hubless Rim

1) The concept is initially designed in 3-D Designing Software such as SolidWorks, Autodesk-Inventor, etc.
2) A metal plate of thickness 3 inch is cut with OD= 17 inch.
3) Now concentric disc is scoopout of radius 13 inch from the plate.

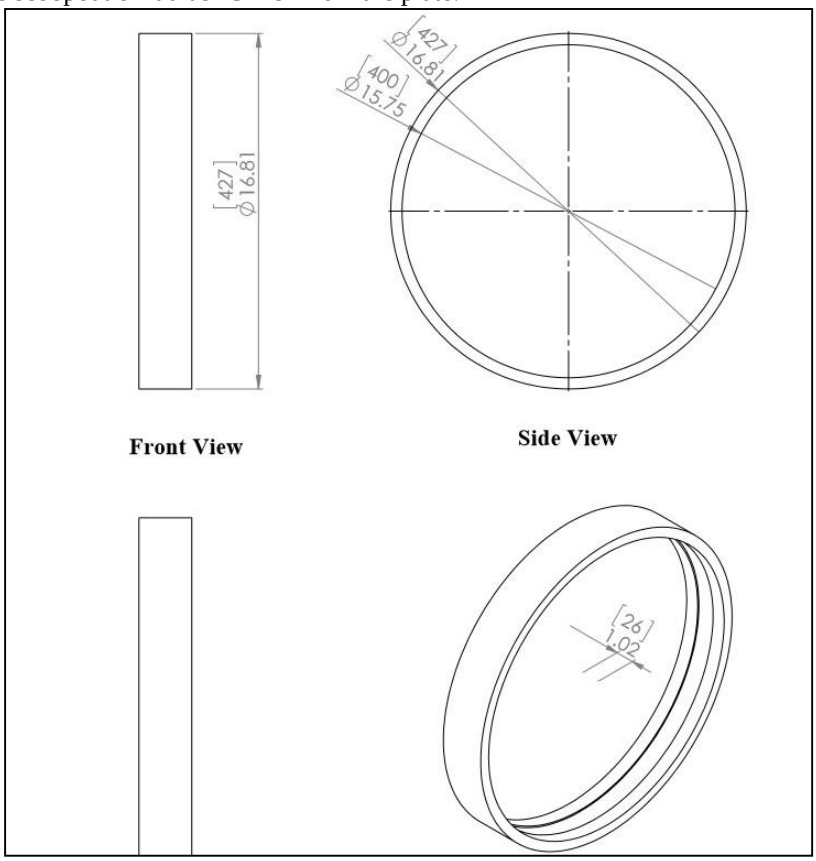

Fig. 3: Design of outer race with groove

4) Now from the remaining ring of ID equals to 13 inch and OD is equal to 17 inch further used for manufacturing the Hubless rim.
5) From the ring two consecutive rings are taken out
   1) Smaller ring with ID=13inch & OD=15inch.
   2) Larger ring with ID=16inch & OD=17inch.

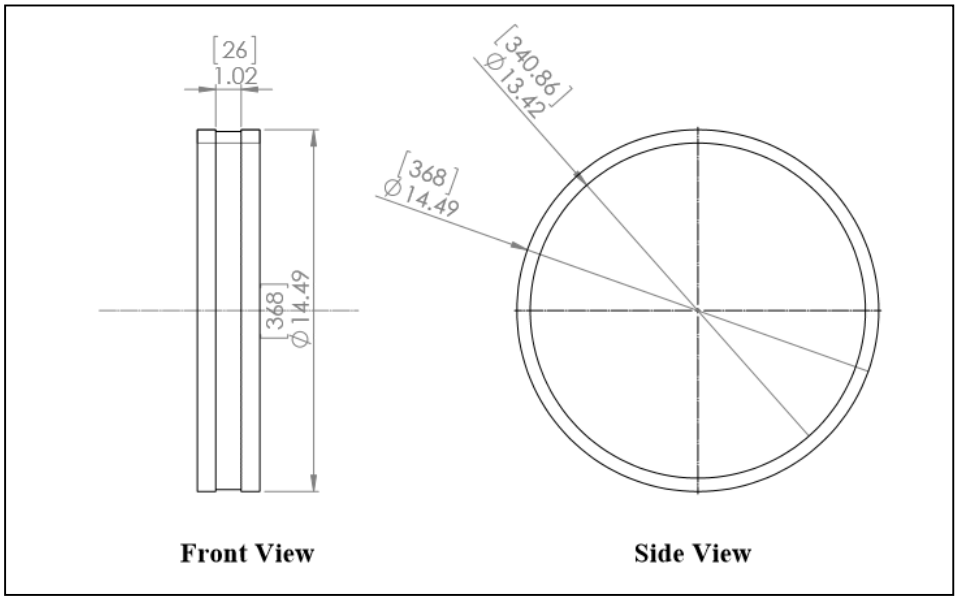

Fig. 4: Design of inner race with groove

6) Smaller ring is machined and manufacture as per dimensions given in the figure-4.
7) Larger ring is machined and manufactured as per dimensions given in the figure-3.
8) Now the inner and outer races are manufactured according to the design and also two side spacers are manufactured of ID=14.70inch and OD=15.60inch for providing equal space and holding to the bearings installed between the races.

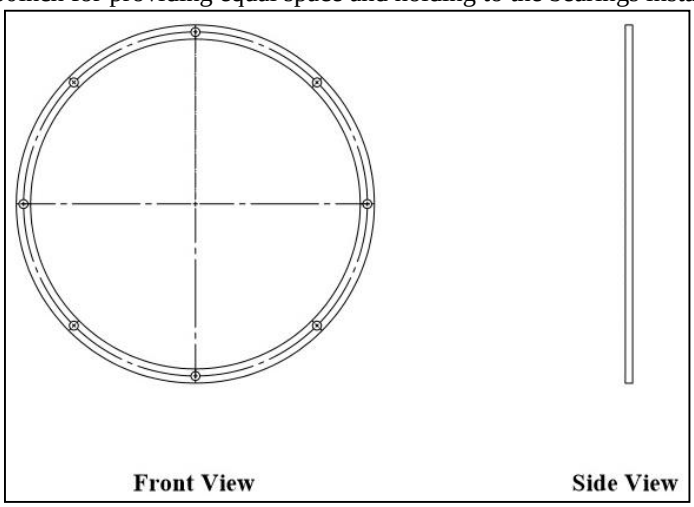

Fig. 5: Design of spacer with holes

9) A total of 12 holes are drilled on the spacer's plates that are equi-distant to each other.
10) Each hole has a bolt provided with 3 ball bearings of bearing number 629-2RS of thickness 8 mm each.
11) The assembly of bearings with spacer between the grooves of inner & outer races is done according to the design.

REFERENCES

[1] Pietro Russomanno. (2010). FOOW Eco Rider. Available: http://www.tuvie.com/foow-eco-rider-by-pietro-russomanno/. Last accessed 24th Feb 2016.
[2] Michael Hines. (2011). Fold-Up Pod Cars. Available: http://www.trendhunter.com/trends/foow-concept-car. Last accessed 24th Feb 2016.
[3] Pietro Russomanno. (2012). FOOW Concept - Urban Rider. Available: http://rssmnn.wix.com/russomanno#!foow-concept/c1zss. Last accessed 23th Feb 2016.