Wireless Patient Health Monitoring System

Prof. Melba D'Souza
Assistant Professor
Department of Electronics and Telecommunication Engineering
Don Bosco College of Engineering, Fatorda, Margoa, Goa

Mr. Royston Zico Dias
UG Student
Department of Electronics and Telecommunication Engineering
Don Bosco College of Engineering, Fatorda, Margoa, Goa

Mr. Abhishek Narayan Pednekar
UG Student
Department of Electronics and Telecommunication Engineering
Don Bosco College of Engineering, Fatorda, Margoa, Goa

Mr. Nihar Premanand Bhat
UG Student
Department of Electronics and Telecommunication Engineering
Don Bosco College of Engineering, Fatorda, Margoa, Goa

Mr. Prabodh Ramesh Kolambkar
UG Student
Department of Electronics and Telecommunication Engineering
Don Bosco College of Engineering, Fatorda, Margoa, Goa

Abstract

In today's world rapid advances in wireless communication systems had and will continue to have a significant impact on the healthcare industry. One of the most important application is to monitor patient's health status anywhere and anytime without restricting the movement of patient. This project is basically construction of a simple system that will be capable of transferring the data of a patient's body parameters to a remote device wirelessly. The necessity of this project is to overcome the difficulty that is encountered by medical experts or medical professionals in simultaneously monitoring multiple patients. This project will help medical experts or medical professionals to observe patients without having to be physically present at their bedside, either at the hospital or at their home. A patient's body temperature and pulse rate are transferred wirelessly through the nRF transceiver module.
Keywords: nRF24L01 transceiver, body temperature, beats per minute (bpm), wireless sensor network (WSN), ATMEGA328R-PU

I. INTRODUCTION

The goal of Wireless Patient Health Monitoring System is to develop a low cost, low power, reliable vital signs monitoring system which collect different type of body parameters and these parameters are wirelessly transmitted to health care professional or medical experts [1]. In case of hospitals where the patients must be under active medical care or under continuous observation for longer duration, constant monitoring is also required, even though the patient is not in dangerous situation [2].

The wireless patient health monitoring system is implemented using existing technologies [3]. The wireless network containing small independent sensor nodes called WSN (wireless sensor network) [4]. The body parameters collected by this device are sent to a base station using radio frequency which is connected to a PC. The base station also controls the entire network [5]. The information from the base station will be received by medical professional or medical experts. Several patients may be monitored from a single base station. The system is designed so that it is easy to use and set up in hospitals and residences where the patients are required to be constantly monitored. There are various hardware components on each node such as microcontroller, sensors, radio frequency transceiver and power supply [6]. Appropriate power supply is required for all the components, for this components required are voltage regulators, resistors, capacitors etc. Figure 1 shows a basic schematic depiction of the system.

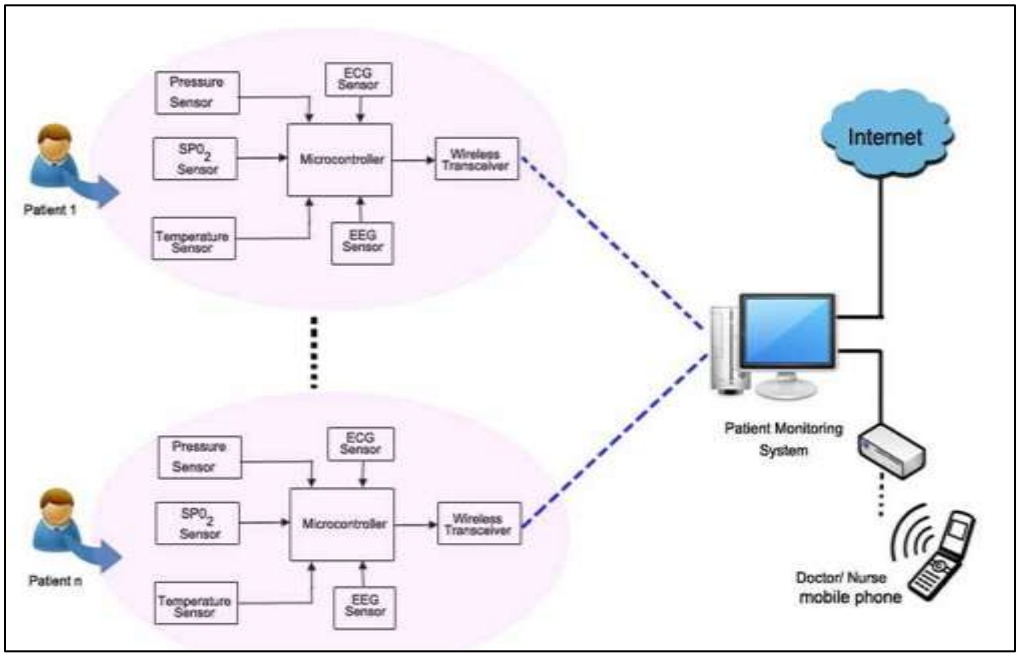

Fig. 1: System depiction of Wireless Patient Health Monitoring System

The temperature sensor produces analog output voltage which is proportional to the temperature[7]. This is required to be converted to digital form so the output of the temperature sensor is connected to the ATMEGA328R-PU microcontroller [8]. The signal received from the sensors is converted from analog to digital by the microcontroller and delivered it to nRF24L01 where it is sent by the radio signals. PC connected to receiver end was used to display the result using another nRF24L01.

II. BACKGROUND

The basic function of this system is to monitor the parameters of patient's body such as pulse rate and temperature and the data collected by the sensors are then sent to the Microcontroller and displayed over the PC [9].

Pulse rate is the number of heartbeats per unit of time and is usually expressed in beats per minute (bpm)[10]. A normal heart beats of adult is about 60 to 100 times a minute [11]. The pulse rate sensor consists of an infrared light-emitting-diode (IR LED) and a photodiode [12]. The IR diode transmits an infrared light into the fingertip placed over the sensor unit, and the photodiode senses the portion of the light that is reflected back [13]. The intensity of reflected light depends upon the blood volume inside the fingertip [14]. So, for each heart beat the amount of reflected infrared light that can be detected by the photodiode slightly changes [15].

The changing blood volume with heartbeat results in a train of pulses at the output of the photodiode, which is too small to be detected directly by a microcontroller since its magnitude is too small [16]. In order to overcome this two-stage high gain, active low pass filter is designed using two Operational Amplifiers (Op-Amps) to filter and amplify the signal to appropriate voltage level so that the number of pulses within a certain interval can be detected by a microcontroller and easily determined the pulse rate in bpm[17].

III. SYSTEM DESIGN

This wireless patient health monitoring system consists of ATMEGA328R-PU microcontroller, temperature sensor LM35, and pulse rate sensor along with the nRF24L01 transceiver. Wireless Patient Health Monitoring System consists of two main components such as data sensing module and data communication module [18]. The data sensing module consists of sensors such as temperature sensor and pulse rate sensor which senses the changes in the respective physiological parameters [19]. Data communication module consists of nRF24L01 transceiver which transmits data.

ATMEGA328R-PU microcontroller collects the data from the sensors and the data is sent to medical centre through nRF24L01 transceiver for storage and further analysis. This data sent can be accessed anytime by the medical experts or medical professionals by typing the corresponding unique IP address in the Internet Browser at the end user device (PC). This is helpful for the doctors to analyse all the patients' details in same system.

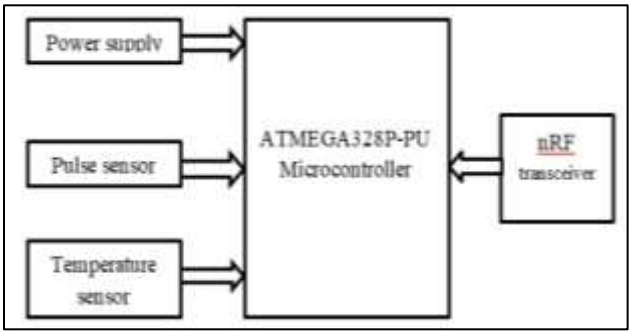

Fig. 2: Transmitter section

Figure 2 above shows the block diagram of transmitter section of wireless patient health monitoring system. The Transmitter section of the system consists of sensors such as pulse sensor and temperature sensor, ATMEGA328R-PU microcontroller, and nRF24L01 transceiver. Microcontroller will collect values of physical parameters from the sensors such as pulse sensor and temperature sensor and then this data will be transmitted into air using nRF24L01 by the microcontroller. Therefore it is not necessary to keep the transmitter unit of the system close to PC rather the transmitting unit can be placed at a far place within the range of nRF24L01 [20].

The job of receiver unit is to receive those incoming values from air and to transfer it into PC with the help of serial communication with COM Port. Figure below describes block diagram of the receiver unit. The base station receives the transmitted digitized signal from nRF24L01transceiver and sends it to microcontroller to establish a connection to PC to display heart rate and the body temperature [21]. PC is used as a display device by using Visual Studio Enterprise 2015[22]. Figure 3, shows the receiver unit used in the system.

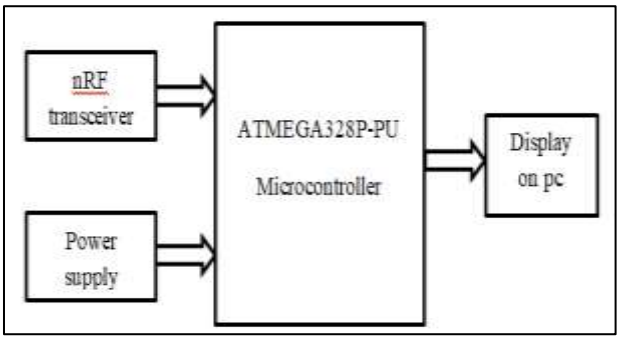

Fig. 3: Block diagram of receiver section

IV. HARDWARE COMPONENTS

A. Temperature Sensor

The temperature sensor chosen is LM35 [23]. The LM35 temperature sensor (shown in figure 4) series are precision integrated circuit and its output voltage is linearly proportional to the temperature in Celsius (Centigrade) [24]. It has a good accuracy which is ±0.4°C and draws very low-power only 60uw [25]. The LM35 sensor does not require any external calibration to provide typical accuracies to cover a full range of -55 to +150°C temperature [26]. Temperature sensor produces an analog voltage with respect to the Celsius temperature [27]. The ADC in the microcontroller samples the voltage and converts to a digital data for the RF transmission [28]. The LM35's low output impedance, linear output, and precise inherent calibration make interfacing control circuitry easy [29].

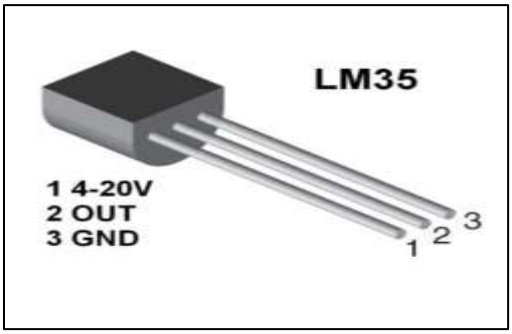

Fig. 4: Temperature Senor LM35

B. Pulse Rate Sensor

The pulse rate sensor node comprises of the pulse detector, operation amplifier (LM358), ADC, signal processing by the microcontroller and the transmitter [30]. The microcontroller ATMEGA328R-PU and nRF24L01 transceiver are selected in the project due to the following advantages: overall cost saving, low power consumption, size and the suitability operating at 2.4GHz (ISM band) and for physiological data processing [31]. The pulse sensor used is shown in figure 5.

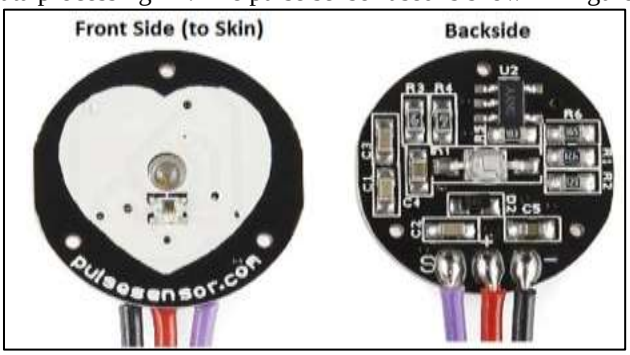

Fig.5 Pulse rate sensor

C. ATMEGA328R-PU

At receiver (base station) side an Arduino Uno is being taken into use [32]. This also works as the programmer device micro-controllers [33]. ISP connectors and SPI interface will help in the programing of microcontrollers [34]. It transfer 8-bit data and have digital I/O pins 14(of which 6 provide PWM output).ATmega328R-PU microcontroller is used for both transmitter and receiver (base station) [35].

D. nRF24L01 Module

These nRF24L01 modules performing at 2.4GHz frequency are radio frequency transceivers [36]. This transceiver module has 8 pins: GND, Vcc, CE, CSN, SCK, MOSI, MISO and IRQ. This module is designed by Nordic Semiconductor [37]. This module is very much applicable for an application that needs ultra-low power for wireless data communication [38]. Its interface to the microcontroller is done via SPI interface [39] . These modules send the data to the microcontroller after receiving it and also receive from microcontroller those commands and data which is processed and ready to be transmitted [40]. Microcontroller is responsible to put these modules in different modes of operation [41]. They are operated with the power supply of 1.9 - 3.3 volts [42]. Very less power is consumed in standby mode [43]. Comparison of the types of transceiver is shown in below table [43]. Figure 6, shows the nrf transceiver and it's pin diagram.

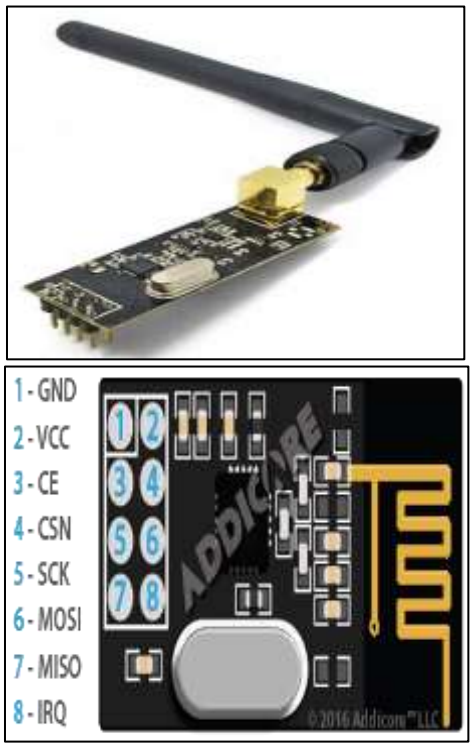

Fig. 6: nRF24L01 transceiver module and its' pin diagram

	nRF Transceiver	*Zigbee*
BAND	*2.4GHz ISM band*	*2.4GHz ISM band*
STANDARD	*IEEEE 802.15*	*IEEE 802.15*
DISTANCE	*Long distance (>1000m)*	*Long distance(10~100m)*
DATA TRANSFER RATE	*250k/1M/2Mbps*	*250Kbps*
COST	*Low cost*	*Expensive*

V. RESULTS

Temperature Measurement: When the power is turned on of the system the industrial temperature sensor i.e. LM35 gives us room temperature in °C [45]. That temperature is displayed on the PC using visual studio.

Pulse rate Measurement: For measurement of the pulse rate there is a cavity in the pulse sensor, which consists of an arrangement of IR-LED and photodiode. When patients finger in placed between IR-LED and photodiode, the pulses are detected which are analog voltages. This analog voltage is too small to be detected by the microcontroller. Therefore these analog voltages are further processed with an operational amplifier LM 358, which has two built in OPAMPs [46]. This collected data is transmitted using nRF24L01 transceiver module. This data is received at the receiver section using same nRF24L01 module. Result is displayed on the PC using visual studio.

VI. CONCLUSION

We have studied the Wireless Patient Health Monitoring System of temperature and pulse rate of humans using nRF24L01 [47]. The pulse rate was measured with the help of photodiode and IR-LED while the temperature was measured by using industrial temperature sensor LM35. Both the data were processed in the ATmega328R-PU and sent to the remote end wirelessly by using nRF24L01 transmitter and received at the remote end by using nRF24L01 receiver [48]. The received data was processed in the ATMEGA328R-PU and the data measured was displayed successfully with the help of PC using visual studio [49]. The wireless transmission was preferred because it helps to move the sensor equipment very easily and reduces the cost as well as there are multi-transmitting units [50].

REFERENCES

[1] Hsu Myat Thwe, Hla Myo Tun [4-6][10-16][21-22][23][25] [27-28][30-44] Patient Health Monitoring Using Wireless Body Area Network
[2] International Journal of Scientific & Technology Research Volume 4, Issue 06, June 2015
[3] Vikramsingh R. Parihar, Akesh Y. Tonge, Pooja D. Ganorkar[7-8][18-19][45-50] Heartbeat and Temperature Monitoring System for Remote Patients using Arduino International Journal of Advanced Engineering Research and Science (IJAERS) [Vol-4, Issue-5, May- 2017]
[4] Manisha Shelar, Jaykaran Singh, Mukesh Tiwari[20] Wireless Patient Health Monitoring System International Journal of Computer Applications (0975 – 8887) Volume 62– No.6, January 2013
[5] Edward Teaw, Guofeng Hou, Michael Gouzman, K. Wendy Tang Amy Kesluk, Matthew Kane Jason Farrell[3] A Wireless Health Monitoring System International Conference on Information Acquisition, June 27 - July 3, 2005, Hong Kong and Macau, China
[6] M.P.Nirmala, Rampriya Mahendran[1][2][9] Home Based Wireless Health Monitoring SystemInternational Journal of Advanced Research in Electrical, Electronics and Instrumentation Engineering (An ISO 3297: 2007 Certified Organization) Vol. 3, Issue 11, November 2014
[7] Amna Abdullah, Asma Ismael, Aisha Rashid, Ali Abou-ElNour, and Mohammed Tarique[24][26][29] Real Time Wireless Health Monitoring Application Using Mobile Devices International Journal of Computer Networks & Communications (IJCNC) Vol.7, No.3, May 2015